UVC-532B59M-MU

5MP Fixed Bullet HD Camera



This camera featuring Dual Light allows users to flexibly switch among three supplemental lighting modes, suiting virtually any need or application , upgrade night vision experience in virtually any setting with always sharply-focused imaging and versatile lighting options.





Key Features

- High quality imaging with 5MP, 2592 × 1944 resolution
- 2.8 mm Fixed focal lens
- Up to 40 m white light distance for bright night imaging
- Up to 50 m IR distance
- D-WDR , 2D DNR
- High quality audio with audio over coaxial cable, built-in mic
- Water and dust resistant (IP67)

Dimensions

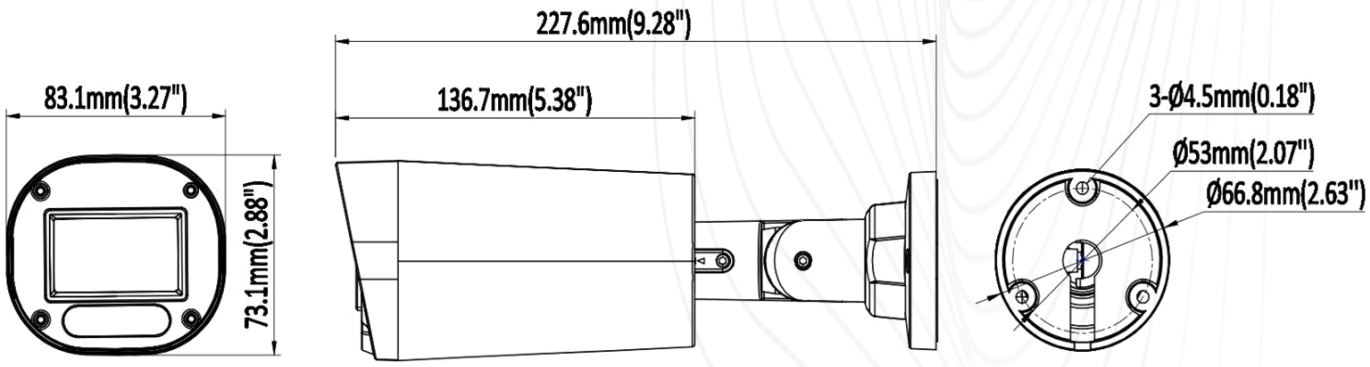

داتیس
ضمانت خرید شماست

Specification

Camera	
Image Sensor	1/2.7" CMOS Sensor
Signal System	PAL/NTSC
Effective Pixels	2592 (H) × 1944 (V)
Electronic Shutter	AUTO/ 1/50 (1/60) ~1/50,000sec
Min. Illumination	0.01Lux@(F1.2,AGC ON), 0LUX with IR
Video Frame Rate	PAL/NTSC: 5MP @20fps
Video Output	AHD/TVI/CVI/CVBS
Mic	Support (only in TVI mode)
Camera Features	
S/N Ratio	≥50dB
Noise Reduction	2D DNR
Day & Night	Auto & WL-IR/AUTO & IR MOED/Color & AUTO WL/COLOR @WL MOED/BW & IR MOED
White Balance	ATW/Manual
WDR	D-WDR
Illumination Distance	50m (IR) 40m (warm Light)
Lens	
Focal Length	2.8 mm F1.6 Fixed Lens
Angle of View	Horizontal FOV: 110°, Vertical FOV: 60°, Diagonal FOV: 126°
Lens Type	Fixed Iris
Mount Type	M12
General	
IP Rating	IP67
Housing Material	Metal
Power Supply	DC12V (±10%)
Power Consumption	< 8W
Working Temperature/Humidity	-40 ~ +60℃, RH95% MAX
Dimensions (W × D × H)	Φ83.1x73.1x227.6 mm
Weight	700 g

داتیس
ضمانت خرید شماست

Related Accessories

LB10	LB01B	LB02	PM03
Junction Box,Φ112.5 × 49.5 MM	Junction Box, 145.2 × 145.2 × 53.5 MM	Junction Box,non-waterproof , Φ103.3 × 37.8MM	Pole Mount , Φ170 × 135.8 ×43.7 MM
		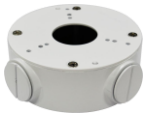	

Please select accessories according to the installation scenario:

